COMPUTER COMMUNICATION
(18CSS202J)

LABORATORY MANUAL

offered by

DEPARTMENT OF
ELECTRONICS AND COMMUNICATION ENGINEERING

FACULTY OF ENGINEERING AND TECHNOLOGY

SRM INSTITUTE OF SCIENCE AND TECHNOLOGY
Ramapuram, Chennai 600089

2020 – 2021 Even Semester

SRM Institute of Science and Technology
Faculty of Engineering & Technology
Ramapuram Campus
Department of ECE

18CSS202J COMPUTER COMMUNICATION LABORATORY
2020-2021 (Even Semester)

Department: CSE AIML A

Year/Semester: II/IV

Name of the Student:

Register No.

Date of Submission:

Staff Name : Dr.Christeena Joseph
Signature :

18CSS202J COMPUTER COMMUNICATION LABORATORY

List of Experiments

S.No	Date of Experiment	Name of the Experiment
1.	22-01-2021	STUDY OF NETWORK COMPONENTS
2.	29-01-2021	IP CONFIGURATION
3.	05-02-2021	SUBNETTING
4.	12-02-2021	LAN CONFIGURATION USING STRAIGHT THROUGH AND CROSS OVER CABLES
5.	19-02-2021	ROUTER CONFIGURATION- CREATING PASSWORDS, CONFIGURING INTERFACES
6.	26-02-2021	BASIC SWITCH CONFIGURATION: VLAN
7.	05-03-2021	CONFIGURING ROUTERS IN STATIC MODE USING PACKET TRACER
8.	12-03-2021	ROUTING INFORMATION PROTOCOL USING PACKET TRACER(DEFAULT ROUTING
9.	19-03-2021	ROUTING INFORMATION PROTOCOL VERSION 1
10.	26-03-2021	ROUTING INFORMATION PROTOCOL VERSION 2
11.	09-04-2021	ENHANCED INTERIOR GATEWAY ROUTING PROTOCOL
12.	16-04-2021	SINGLE AREA OSPF LINK COSTS AND INTERFACES
13.	23-04-2021	MULTI AREA OPEN SHORTEST PATH FIRST ROUTING PROTOCOL
14.	30-04-2021	BORDER GATEWAY ROUTING PROTOCOL

EXPERIMENT-1

STUDY OF NETWORK COMPONENTS

Aim: To study the following network devices in detail

- PC
- Server
- Repeater
- Hub
- Switch
- Bridge
- Router
- Gate Way
- Transmission medium

1. Node: In a communications network, a network node is a connection point that can receive, create, store or send data along distributed network routes.

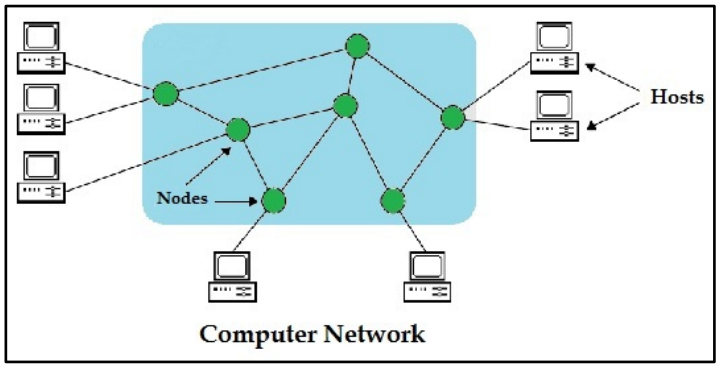

2. Repeater: Functioning at Physical Layer.

A repeater is an electronic device that receives a signal and retransmits it at a higher level and/or higher power, or onto the other side of an obstruction, so that the signal can cover longer distances.

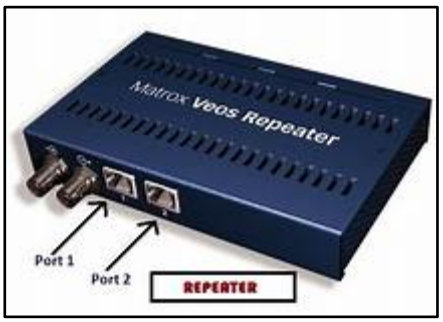

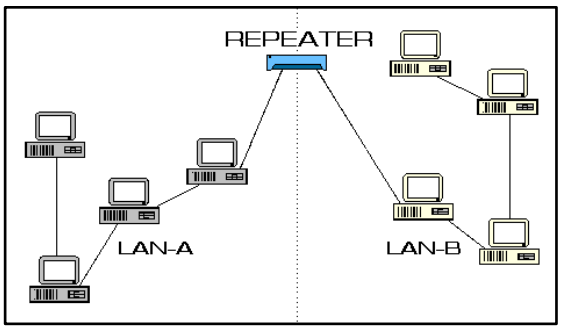

3. Hub: An Ethernet hub, active hub, network hub, repeater hub
Hub or concentrator is a device for connecting multiple twisted pair or fiber optic Ethernet devices together and making them act as a single network segment. Hubs
work at the physical layer (layer 1) of the OSI model. The device is a form of multiport repeater. Repeater hubs also participate in collision detection, forwarding
a jam signal to all ports if it detects a collision.

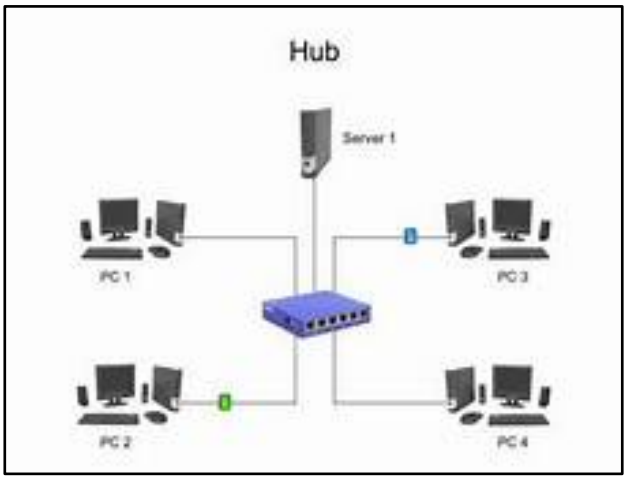

4.Switch: A network switch is a computer networking device that connects network segments. The term commonly refers to a network bridge that processes and routes data at the data link layer (layer 2) of the OSI model. Switches that additionally process data at the network layer (layer 3 and above) are often referred to as Layer 3 switches or multilayer switches.

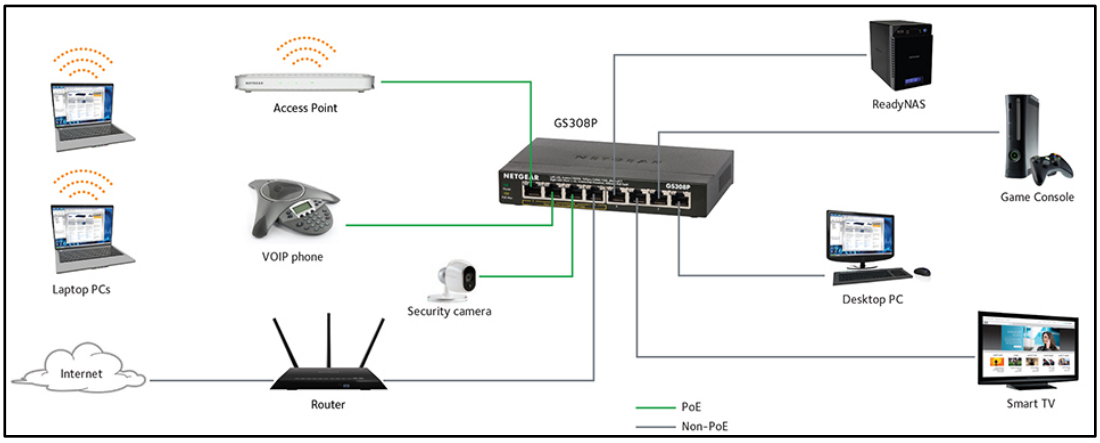

5.Bridge: A network bridge connects multiple network segments at the data link layer (Layer 2) of the OSI model. In Ethernet networks, the term *bridge* formally means a device that behaves according to the IEEE 802.1D standard. A bridge and switch are very much alike; a switch being a bridge with numerous ports. *Switch* or *Layer 2 switch* is often used interchangeably with *bridge*. Bridges can analyze incoming data packets to determine if the bridge is able to send the given packet to another segment of the network.

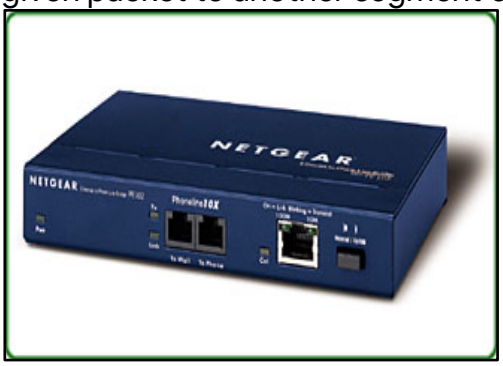

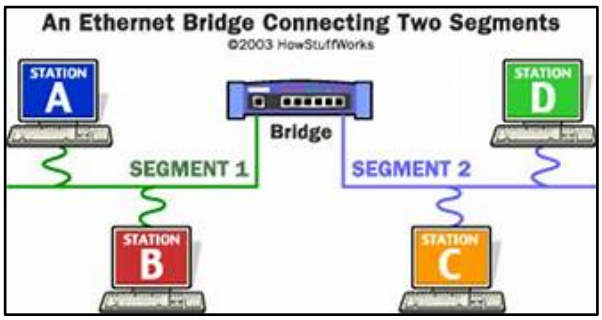

6.Router: A router is an electronic device that interconnects two or more computer networks, and selectively interchanges packets of data between them. Each data packet contains address information that a router can use to

determine if the source and destination are on the same network, or if the data packet must be transferred from one network to another. Where multiple routers are used in a large collection of interconnected networks, the routers exchange information about target system addresses, so that each router can build up a table showing the preferred paths between any two systems on the interconnected networks.

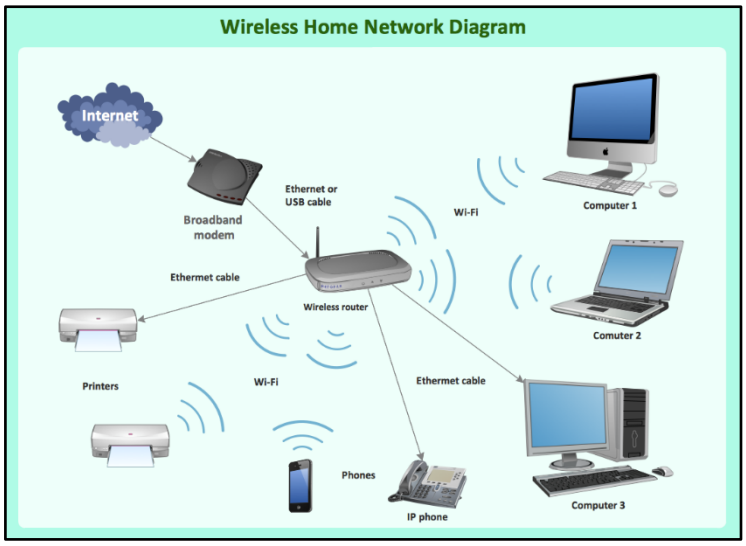

7. Gate Way: In a communications network, a network node equipped for interfacing with another network that uses different protocols. A gateway may contain devices such as protocol translators, impedance matching devices, rate converters, fault isolators,
signal translators as necessary to provide system interoperability. It also requires the establishment of mutually acceptable administrative procedures between both networks . A protocol translation/mapping gateway interconnects networks with different network
protocol technologies by performing the required protocol conversions.
.

Hardware Components used in Communication Systems

Gateway

A gateway is required to connect a network with other types of networks that are running different protocols.

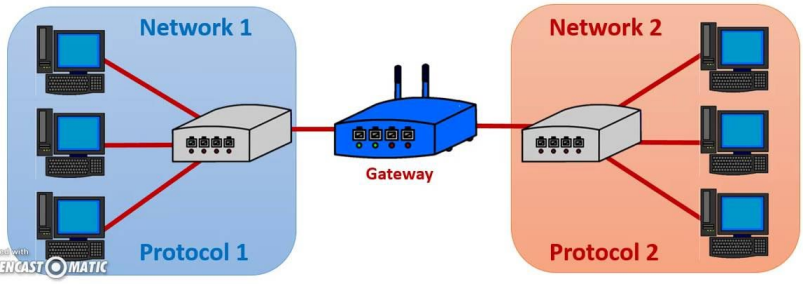

Recorded with SCREENCAST-O-MATIC

8.Server:A server is a type of computer or device on a network that manages network resources. Servers are often dedicated, meaning that they perform no other tasks besides their server tasks. Onmultiprocessing operating systems, however, a single computer can execute several programs at once. A server in this case could refer to the program that is managing resources rather than the entire computer.

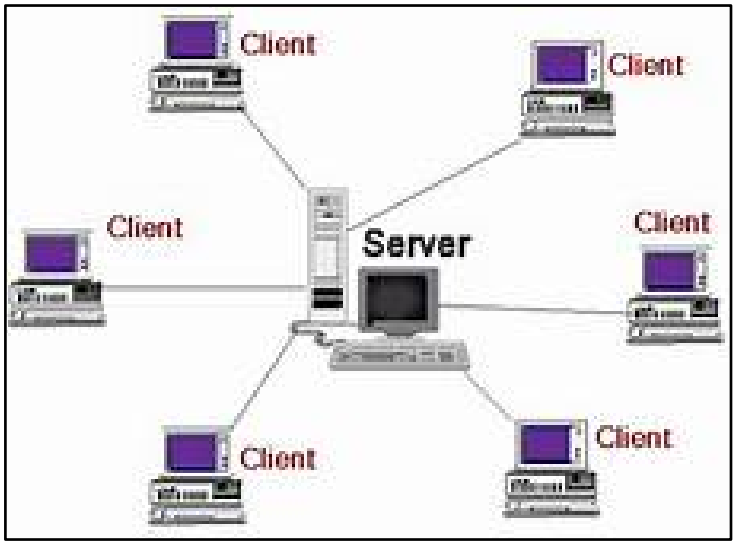

9. Transmission media: The medium through which the signals travel from one device to another. These are classified as guided and unguided. Guided media are those that provide a conduit from one device to another. Eg Twisted pair, coaxial cable etc. Unguided media transport signals without using physical cables. Eg. Air.

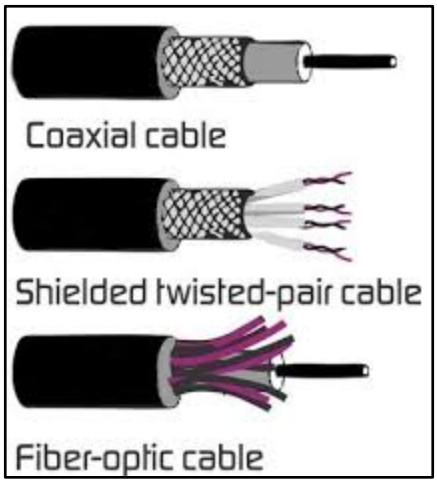

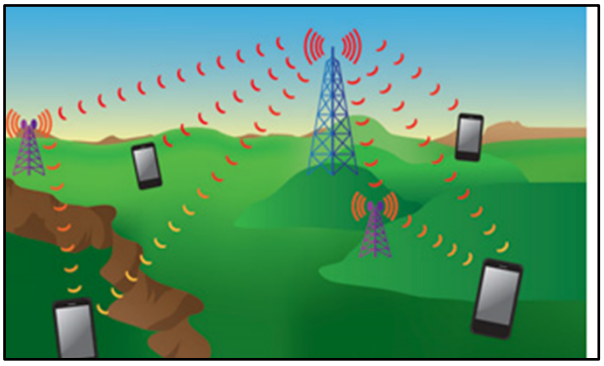

Result: Thus the network components are studied in detail.

EXPERIMENT-2
IP CONFIGURATION

Aim: To configure the IP address for the hosts in a star topology

Software/Components required: Cisco Packet Tracer 7.1/End devices, Generic Hub, connectors.

Procedure

Steps for building topology:

Step 1: Start Packet Tracer
Step 2: Choosing Devices and Connections
Step 3: Building the Topology – Adding Hosts
Click on the end devices.
Click on the generic host.
Move the cursor into topology area.
Single click in the topology area and it copies the device.
Step 4: Building the Topology – Connecting the Hosts to Hub
Select a generic Hub, by clicking once on Hub and once on a generic hub
Step 5: Connect PCs to host by first choosing Connections
Click once on the Copper Straight-through cable
Click once on PC0
Choose Fastethernet
Drag the cursor to Hub0
Click once on Hub0.
Step 6: Configuring IP Addresses and Subnet Masks on the Hosts
To start communication between the hosts IP Addresses and subnet masks had to be
configured on the devices. Click once on PC0. Choose the Config tab and click on
FastEthernet0. Type the IP address in its field. Click on the subnet mask.it will be
generated automatically.
Step 7: To confirm Data transfer between the devices
Click on the node. Select desktop option and then command prompt. Once the window
pops up, ping the IP address of the device to which node0 is connected. Ping statistics
will be displayed. (or)
Verifying Connectivity in Real time Mode
Click on the Real time mode.
Select the Add Simple PDU tool used to ping devices.
Click once on PC0, then once on PC3.
The PDU Last Status should show as Successful.
Verifying Connectivity in Simulation Mode

Click on the Simulation mode.
Disable all filters and select only ICMP.
Select the Add Simple PDU tool used to ping devices
Click once on PC0, then once on PC3.Continue clicking Capture/Forward button until the ICMP ping is completed. The ICMP messages move between the hosts, hub
and switch. The PDU Last Status should show as successful.

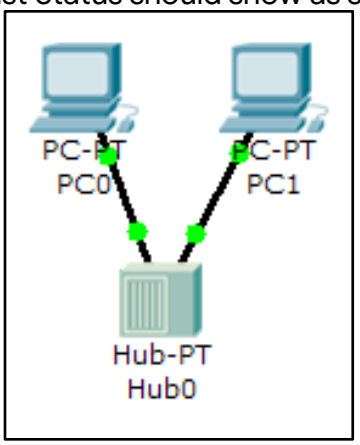

Simulated Output:

Result: Thus the hosts in a Star topology are configured and simulated using Packet Tracer 7.1 simulation Tool.

EXPERIMENT 3

SUBNETTING

Aim: To subnet a given network and simulate using Cisco packet tracer simulation tool

Software used: Cisco Packet Tracer

Network components: PCs-6, Routers 2, Connectors, switches 2

Scenario: To subnet a network with IP address: **192.168.1.0/27** and to find the subnet network
address, broadcast address and host address of the subnets.

(i) Total no of subnets in this IP address = 2^n = 2^3=**8 Networks**
(ii) No of hosts in each sub network: 256 (0 to 255) = 256/8=**32 Hosts**

iii) The subnet mask is : 255.255.255.224

255	255	255	224
11111111	11111111	11111111	11100000

iv) The number of subnets is 8 .The first address of the subnet is the network address, last
address is the broadcast address and the remaining 30 addresses are allocated to the hosts.

NETWORK	IP	NETWORK ID	HOST ID	BROADCAST ID
NETWORK 1	192.168.1.0	192.168.1.0	192.168.1.1	192.168.1.31
	192.168.1.31		192.168.1.30	
NETWORK 2	192.168.1.32	192.168.1.32	192.168.1.33	192.168.1.63
	192.168.1.63		192.168.1.62	
NETWORK 3	192.168.1.64	192.168.1.64	192.168.1.65	192.168.1.95
	192.168.1.95		192.168.1.94	

NETWORK 4	192.168.1.96	192.168.1.96	192.168.1.97	192.168.1.127
	192.168.1.127		192.168.1.126	
NETWORK 5	192.168.1.128	192.168.1.128	192.168.1.129	192.168.1.159
	192.168.1.159		192.168.1.158	
NETWORK 6	192.168.1.160	192.168.1.160	192.168.1.161	192.168.1.191
	192.168.1.191		192.168.1.190	
NETWORK 7	192.168.1.192	192.168.1.192	192.168.1.193	192.168.1.223
	192.168.1.223		192.168.1.222	
NETWORK 8	192.168.1.224	192.168.1.224	192.168.1.225	192.168.1.255
	192.168.1.255		192.168.1.254	

Procedure:

Step 1: Select the generic hosts, switches and routers

Step 2: Connect the host, switches and routers using copper cross over and router to router using serial DCE

Step 3: Identify the networks and label as 192.168.1.0, 192.168.1.32 and 192.168.1.64

Step 4: Configure the generic hosts with the following IP address and gateway address

Host	IP address	Gateway	Network
PC0	192.168.1.1	192.168.1.4	192.168.1.0
PC1	192.168.1.2	192.168.1.4	192.168.1.0
PC2	192.168.1.3	192.168.1.4	192.168.1.0
PC3	192.168.1.65	192.168.1.68	192.168.1.64
PC4	192.168.1.66	192.168.1.68	192.168.1.64
PC5	192.168.1.67	192.168.1.68	192.168.1.64

Step 5: Configure the router 0 by clicking on the config. The router is connected to 2 networks. For each connection, separate IP addresses are assigned. For connections to network 1 and 2 the IP address for router 0 are 192.168.1.4 and 192.168.1.33 respectively. Similarly for router 1, to connect to network 2 ad 3, the IP addresses are 192.168.1.34 and 192.168.1.68 Choose the subnet mask as 255.255.255.224.Select the fast Ethernet for connecting host and router and serial interface for connecting the

routers. click on the port status to turn on the router.

Step 6: To configure router in static mode click on the router 0, select the static mode. Type the address of the network to which the packets to be sent (192.168.1.64) and the address of the next router(192.168.1.34). Click ok. Similarly click on the router 1, select the static mode. Type the address of the network to which the packets has to be sent (192.168.1.0) and the address of the next router (192.168.1.33).

Step 7: To confirm Data transfer between the devices

Click on the node. Select desktop option and then command prompt. Once the window pops up, ping the IP address of the device to which node0 is connected. Ping statistics will be displayed. Also simulate in simulation and real mode.

Simulation Output:

Result: Thus the subnetting of the given network is carried out and simulated using packet tracer simulation tool.

EXPERIMENT 4

LAN CONFIGURATION USING STRAIGHT THROUGH AND CROSS OVER CABLES

Aim: To simulate the segments of a LAN which is in bus and tree topology and hence to connect the segments using switch, crossover and straight through cables in Cisco packet tracer.

Software/Components required: Packet Tracer/End devices, switches, cross over and straight through cables.

Steps for building bus and tree topology:

Step 1: Choosing Devices and Connections

Step 2: Building the tree topology and bus topolgy– Adding Hosts

Single click on the End Devices.

Single click on the Generic host.

Move the cursor into topology area.

Single click in the topology area and it copies the device.

Step 3: Building the Topology – Connecting the Hosts to switches

Select a switch, by clicking once on switch and once on a generic switch

Add the switch by moving the plus sign "+"

Step 4: Connect PCs to switch by choosing straight through cables

Click once on the straight through cable

Click once on PC

Choose Fast Ethernet
Drag the cursor to Switch0
Click once on Switch0
Notice the green link lights on PC Ethernet NIC and amber light Switch port.The switch port is temporarily not forwarding frames, while it goes through the stages for the Spanning Tree Protocol (STP) process. After about 30 seconds the amber light will change to green indicating that the port has entered the forwarding stage. Frames can now forward out of the switch port.

Step 5: Configuring IP Addresses and Subnet Masks on the Hosts

To start communication between the hosts IP Addresses and Subnet Masks had to be configured on the devices. Click once on PC0. Choose the config tab and click on FastEthernet0. Type the IP address in its field. Click on the subnet mask.it will be generated automatically.

Step 6: To create a tree topology connect each of the PC to the corresponding switch and interconnect the switches using cross over cables

Step 7: To create a bus topology connect each of the PC to the switch using straight through cable and connect the switches using cross over cables

Step 7: To confirm Data transfer between the devices

Click on the node. Select desktop option and then command prompt. Once the window pops up, ping the IP address of the device to which node0 is connected. Ping statistics will be displayed.

Step 8: Connect the two segments of the LAN using a switch.

Step 9: Simulate the tree and bus topologies which are segments of the same LAN in Simulation mode and Real time mode

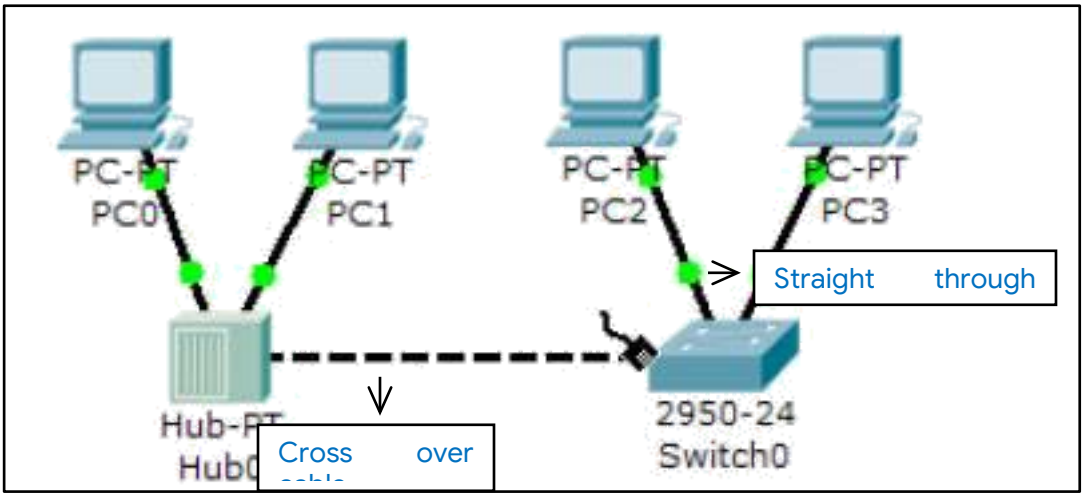

Simulation Output:

Result: Thus the LAN configuration using crossover and straight through cables is simulated in Cisco packet tracer.

EXPERIMENT 5
ROUTER CONFIGURATION (CREATING PASSWORDS, CONFIGURING INTERFACES)

Aim: To simulate Routing Information Protocol using packet tracer simulation tool
.

Software used: Cisco Packet Tracer

Network components: PCs-2, Routers 2, Connectors

Procedure

Step 1: Select the generic hosts, switches and routers

Step 2: Connect the host, switches and routers using copper cross over and router to router
using serial DCE

Step 3: Identify the networks and label as 20.20.20.0,50.50.50.0 and 30.30.30.0

Step 4: Configure the generic hosts PC0 with the IP address 20.20.20.2, gateway address 20.20.20.1 and host 2 with IP address 30.30.30.2 and gate way address 30.30.30.1

Step 5: Configuration of the router 0 and router 1 are done by CLI commands. The router0 is connected to 2 networks. For each connection, separate IP addresses are assigned. For connections to network 1 and 2 the IP address for router 0 are 20.20.20.0 and. 50.50.50.0 respectively. Similarly for router 1, to connect to network 2 and 3, the IP addresses are 50.50.50.0 and 30.30.30.0. Choose the subnet mask as 255.255.255.0.Router 0 is configured by clicking on the CLI. Following are the commands for changing the router name ,configuring the interfaces and creating password.

```
router>en
 router #configure terminal
Enter configuration commands, one per line. End with CNTL/Z.
Router # hostname Router1
Router1(config)#interface fa0/0
Router1(config-if)#ip address 20.20.20.1 255.255.255.0
Router1(config-if)#no shut
Router1(config-if)#exit
Router1(config)#interface se2/0
Router1(config-if)#ip address 50.50.50.1 255.255.255.0
Router1(config-if)#clock rate 64000
Router1(config-if)#no shut
Router1(config-if)#
 %LINK-5-CHANGED: Interface Serial2/0, changed state to up
Router1(config-if)#
%LINEPROTO-5-UPDOWN: Line protocol on Interface Serial2/0, changed state to up
Router1(config-if)#exit
Router1(config)#router rip
Router1(config-router)#network 20.20.20.0
Router1(config-router)#network 50.50.50.0
Router1(config-router)#exit
Router1(config)#line console 0
Router1(config-line)#password 12345
Router1(config-line)#login
Router1(config-line)#exit
Router1(config)#
Router1(config)#
```

Router1(config)#exit
Router1#
%SYS-5-CONFIG_I: Configured from console by console
Router1#exit
Router1 con0 is now available
Press RETURN to get started.
User Access Verification
Password:

Step 6: The second router is also configured using the above commands.
Step 7: To confirm data transfer between the devices
Click on the node. Select desktop option and then command prompt. Once the window
pops up, ping the IP address of the device to which node0 is connected. Ping statistics
will be displayed. Also simulate in simulation and real mode.

Simulation Output:

Result: Thus the configuration of router using CLI commands is simulated using packet tracer

EXPERIMENT 6

BASIC SWITCH CONFIGURATION: VLAN

Aim: To configure the VLAN and simulate in the Cisco Packet Tracer

Software/Components required: Cisco Packet Tracer 7.1/ End devices PCs-8, Switch 2950-24, connectors.

Procedure

Steps for building topology:

Step 1: Start Packet Tracer

Step 2: Choosing Devices and Connections

Step 3: Building the Topology – Adding Hosts

Click on the end devices.

Click on the generic host.

Move the cursor into topology area.

Single click in the topology area and it copies the device.

Step 4: Select the switch 2650-24, by clicking once on switch and once on the switch 2650-24

Add the switch by moving the plus sign "+"

Connect PCs to switch by first choosing Connections

Click once on the Copper Straight-through cable

Click once on PC0

Choose Fastethernet

Drag the cursor to Switch0

Click once on Switch0

Notice the green link lights on PC Ethernet NIC and amber light switch port. The switch port is temporarily not forwarding frames, while it goes through the stages for the Spanning Tree Protocol (STP) process. After about 30 seconds the amber light will change to green indicating that the port has entered the forwarding stage. Frames can now forward out the switch port.

Step 5: Configuring IP Addresses and Subnet Masks on the Hosts

To start communication between the hosts IP Addresses and subnet masks had to be configured on the devices. Click once on PC0. Choose the Config tab and click on FastEthernet0. Type the IP address 192.168.1.1 in its field. Click on the subnet mask.it will be generated automatically(255.255.255.0) Similarly configure the other PCs.

Step 6: To confirm Data transfer between the devices

Click on the node. Select desktop option and then command prompt. Once the window pops up, ping the IP address of the device to which node0 is connected. Ping statistics will be displayed. (or)

Verifying Connectivity in Real time Mode

Click on the Real time mode.

Select the Add Simple PDU tool used to ping devices.

Click once on PC0, then once on PC3.
The PDU Last Status should show as Successful.
Verifying Connectivity in Simulation Mode
Click on the Simulation mode.
Disable all filters and select only ICMP.
Select the Add Simple PDU tool used to ping devices
Click once on PC0, then once on PC3.Continue clicking Capture/Forward button
until the ICMP ping is completed. The ICMP messages move between the hosts, hub
and switch. The PDU Last Status should show as successful.

Step 7: Configuring virtual LAN.VLAN technology is to divide a LAN into logical instead of physical LANS. Each VLAN is a work group in an organization. The membership is defined by software. The members of a VLAN can send messages to other members of same group with assurance that members of other VLAN will not receive this message. To configure VLAN click on the switch. Click on the interface fa0/1. Give the desired VLAN number in the VLAN field, Click onto VLAN database. Enter the VLAN number and VLAN name and click add. To confirm Data transfer between the devices Click on the node. Select desktop option and then command prompt. Once the window pops up, ping the IP address of the device to which node0 is connected. Ping statistics will be displayed.

Simulation output:

Result: Thus the VLAN is configured and simulated using Packet Tracer simulation tool.

EXPERIMENT 7

CONFIGURING ROUTERS IN STATIC MODE USING PACKET TRACER

Aim: To configure router in static mode using packet tracer simulation tool
.

Software used: Cisco Packet Tracer

Network components: PCs-2, Routers 2, Connectors

Procedure

Step 1: Select the generic hosts and routers

Step 2: Connect the host and routers using copper cross over and router to router using serial DCE

Step 3: Identify the networks and label as 10.10.1.0, 10.10.2.0 and 10.10.3.0

Step 4: Configure the generic hosts PC0 with the IP address 10.10.1.1, gateway address 10.10.1.2 and host 2 with IP address 10.10.3.1and gate way address 10.10.3.2

Step 5: Configure the router 0 by clicking on the config. The router is connected to 2 networks. For each connection, separate IP addresses are assigned. For connections to network 1 and 2 the IP address for router 0 are 10.10.1.2 and 10.10.2.1 respectively. Similarly for router 1, to connect to network 2 ad 3, the IP addresses are 10.10.2.2 and 10.10.3.2. Choose the subnet mask as 255.255.255.0.Select the fastethernet for connecting host and router and serial interface for connecting the routers click on the port status to turn on the router.

Step 6: To configure router in static mode click on the router 0, select the static

mode. Type the
address of the network to which the packets to be sent (10.10.3.0) and the address of .
the next router(10.10.2.2). Click ok. Similarly click on the router 1,select the static
mode. Type the address of the network to which the packets to be sent (10.10.1.0) and
the address of the next router(10.10.2.1).

Step 7: To confirm Data transfer between the devices

Click on the node. Select desktop option and then command prompt. Once the window
pops up, ping the IP address of the device to which node0 is connected. Ping statistics
will be displayed. Also simulate in simulation and real mode.

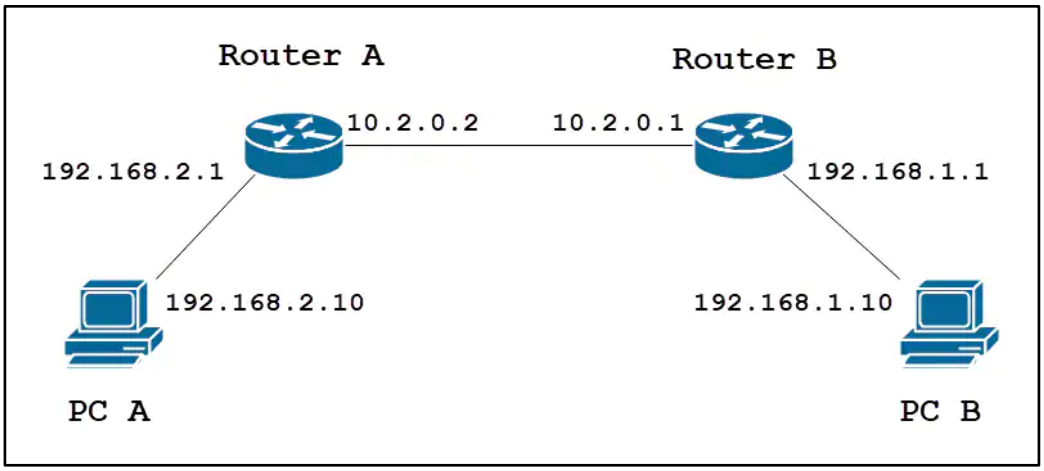

Simulation Output:

Result: Thus the router is configured in static mode using packet tracer simulation tool.

EXPERIMENT 8

ROUTING INFORMATION PROTOCOL USING PACKET TRACER (DEFAULT ROUTING)

Aim: To simulate Routing Information Protocol (Default) using packet tracer simulation tool

.

Software used: Cisco Packet Tracer

Network components: PCs-2, Routers 2, Connectors

Procedure

Step 1: Select the generic hosts, switches and routers

Step 2: Connect the host, switches and routers using copper cross over and router to router using serial DCE

Step 3: Identify the networks and label as 10.10.1.0, 10.10.2.0 and 10.10.3.0

Step 4: Configure the generic hosts PC0 with the IP address 10.10.1.1, gateway address 10.10.1.2 and host 2 with IP address 10.10.3.1and gate way address 10.10.3.2

Step 5: Configure the router 0 by clicking on the config. The router is connected to 2 networks. For each connection, separate IP addresses are assigned. For connections to network 1 and 2 the IP address for router 0 are 10.10.1.2 and 10.10.2.1 respectively.

Similarly for router 1, to connect to network 2 ad 3, the IP addresses are 10.10.2.2 and 10.10.3.2. Choose the subnet mask as 255.255.255.0.Select the fastethernet

for

connecting host and router and serial interface for connecting the routers click on the

port status to turn on the router.

Step 6: To configure Routing Information Protocol , click on the router 0,select RIP. Type the

address of the networks which the router knows (10.10.2.0). Click add. Again type the . address which router knows(10.10.1.0). Click add. Go to settings and save the

configuration in NVRAM. Similarly click on the router 1, add the addresses 10.10.2.0

and 10.10.3.0

Step 7: To confirm Data transfer between the devices

Click on the node. Select desktop option and then command prompt. Once the window

pops up, ping the IP address of the device to which node0 is connected. Ping statistics

will be displayed. Also simulate in simulation and real mode.

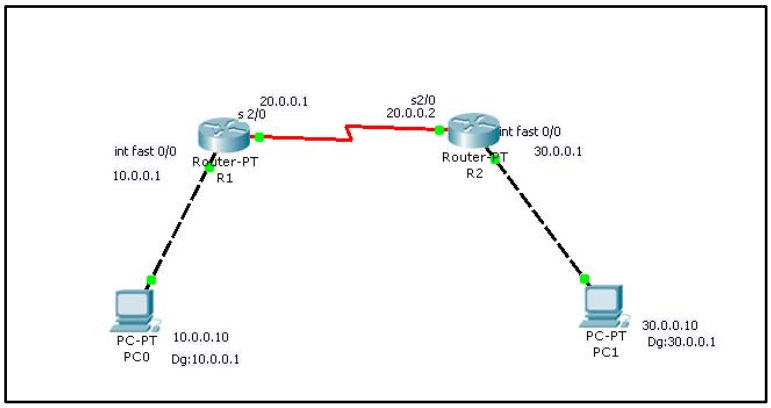

Simulation Output:

Result: Thus the Routing Information Protocol (Default Routing) is simulated using packet tracer simulation tool.

EXPERIMENT 9

ROUTING INFORMATION PROTOCOL (V1) USING PACKET TRACER

Aim: To simulate Routing Information Protocol (V1) using packet tracer simulation tool

.

Software used: Cisco Packet Tracer

Network components: PCs 4, Routers 2, Connectors, Switches 2

Procedure

Step 1**:** Select the generic hosts, switches and routers

Step 2: Connect the host, switches and routers using copper cross over and router to router using serial DCE

Step 3: Identify the networks and label as 100.100.100.0, 150.150.150.0 and 200.200.200.3

Step 4: Configure the generic hosts PC0 and PC1 with the IP address 100.100.100.1 and 100.100.100.2 with gateway address 100.100.100.3 respectively. Configure the generic hosts PC2 and PC3 with the IP address 200.200.200.1and 200.200.200.2 with gateway address 200.200.200.3 respectively.

Step 5: Configure the router 0 by clicking on the config. The router is connected to 2 networks. For each connection, separate IP addresses are assigned. For connections to network 1 and 2 the IP address for router 0 are 100.100.100.3 and. 150.150.150.1 respectively. Similarly for router 1, to connect to network 2 ad 3, the IP addresses are 150.150.150.2 and 200.200.200.3. Choose the subnet mask as 255.255.255.0.Select fast Ethernet interface for connecting host and router and serial interface for connecting the routers click on the port status to turn on the router .

Step 6: To configure Routing Information Protocol, click on the router 0, select RIP. Type the address of the networks which the router is connected (100.100.100.0). Click on add. Again type the address which router knows (150.150.150.0). Click on add. Go to settings and save the configuration in NVRAM. Similarly click on the router 1, add the addresses 150.150.150.0 and 200.200.200.0

Step 7: To confirm Data transfer between the devices

Click on the node. Select desktop option and then command prompt. Once the window pops up, ping the IP address of the device to which node0 is connected. Ping statistics will be displayed. Also simulate in simulation and real mode.

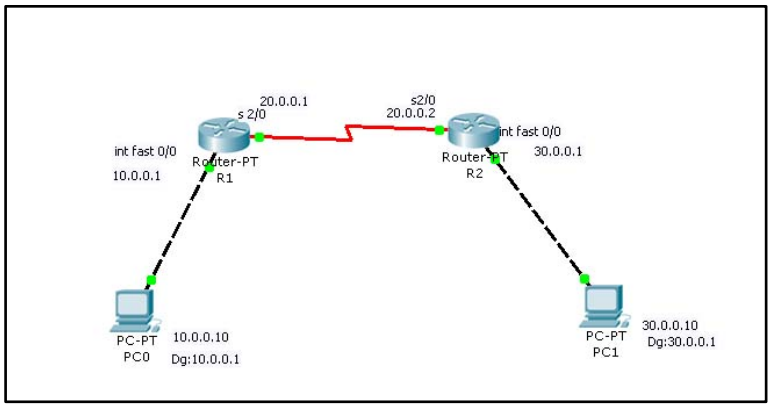

Simulation Output:

Result: Thus the Routing Information Protocol (Version 1) is simulated using packet tracer
simulation tool.

EXPERIMENT 10

ROUTING INFORMATION PROTOCOL(V2)USING PACKET TRACER

Aim: To simulate Routing Information Protocol (V2) using packet tracer simulation tool

.

Software used: Cisco Packet Tracer

Network components: PCs 4, Routers 2, Connectors, Switches 2

Procedure

Step 1**:** Select the generic hosts, switches and routers

Step 2: Connect the host, switches and routers using copper cross over and router to router using serial DCE

Step 3: Identify the networks and label as 192.168.1.0, 192.168.1.32 and 192.168.1.64

Step 4: Configure the generic hosts with the following IP address and gateway address

Host	IP address	Gateway	Network
PC0	192.168.1.1	192.168.1.3	192.168.1.0
PC1	192.168.1.2	192.168.1.3	192.168.1.0
PC2	192.168.1.65	192.168.1.67	192.168.1.64
PC3	192.168.1.66	192.168.1.67	192.168.1.64

Step 5: Configure the router 0 by clicking on the config. The router is connected to 2 networks. For each connection, separate IP addresses are assigned. For connections to network 1 and 2 the IP address for router 0 are 192.168.1.3 and 192.168.1.33 respectively. Similarly for router 1, to connect to network 2 ad 3, the IP addresses are 192.168.1.34 and 192.168.1.67 Choose the subnet mask as 255.255.255.224.Select the fastethernet for connecting host and router and serial interface for connecting the routers click on the port status to turn on the router.

Step 6: To configure Routing Information Protocol version 2, click on the router 0.Click on the CLI . Type the following commands

```
#en
#config t
# router rip
# version 2
#network 192.168.1.0
```

#network 192.168.1.32
#exit
Similarly click on the router 2, click on the CLI .Type the following commands
#en
#config t
router rip
version 2
#network 192.168.1.64
#network 192.168.1.32
#exit

Step 7: To confirm Data transfer between the devices

Click on the node. Select desktop option and then command prompt. Once the window pops up, ping the IP address of the device to which node0 is connected. Ping statistics will be displayed. Also simulate in simulation and real mode.

Simulation output:

Result: Thus the Routing Information Protocol (Version 2) is simulated using packet tracer
simulation tool.

EXPERIMENT-11
ENHANCED INTERIOR GATEWAY ROUTING PROTOCOL

Aim: To simulate Enhanced Interior Gateway Routing Protocol (EIGRP) using Cisco packet
. tracer simulation tool
Software used: Cisco Packet Tracer
Network components: PCs-6, Routers 3, Connectors, switches (3)

Procedure
Step 1: Select the generic hosts, switches and routers
Step 2: Connect the host, switches and routers using copper cross over and router to router
using serial DCE
Step 3: Identify the networks and label as 192.168.1.0, 192.168.2.0,192.168.3.0,10.0.0.0
and 20.0.0.0
Step 4: Configure the generic hosts with the following IP address and gateway address

Host	IP address	Gateway	Network
PC0	192.168.1.2	192.168.1.1	192.168.1.0
PC1	192.168.1.3	192.168.1.1	192.168.1.0
PC2	192.168.2.2	192.168.2.1	192.168.2.0
PC3	192.168.2.3	192.168.2.1	192.168.2.0
PC4	192.168.3.2	192.168.3.1	192.168.3.0
PC5	192.168.3.3	192.168.3.1	192.168.3.0

Step 5: Configure the router 0 by clicking on the config. The router0 is connected to 2
networks. For each connection, separate IP addresses are assigned. For

connections to
networks 1 and 2, the IP address for router 0 are 192.168.1.1 and 10.0.0.1 respectively.
Similarly for router 1, to connect to network 1,2 ad 3, the IP addresses are 10.0.0.2
192.168.2.1 and 20.0.0.1 and for router 2 to connect to network 2 and 3 the IP address
are 20.0.0.2 and 192.168.3.1.Choose the subnet mask as 255.255.255.0 and 255.0.0.0.
based on the IP address. Select the fast Ethernet interface for connecting host and
router and serial interface for connecting the routers click on the port status to turn on
the router

Step 6: To configure Enhanced Interior Gateway Routing Protocol(EIGRP)click on the router
0,click on the CLI. Type the following commands

```
#en
#config t
# router eigrp 1
#network 192.168.1.0
#network 10.0.0.0 0
#exit
```

Similarly click on the router 1, click on the CLI .Type the following commands

```
#en
#config t
# router eigrp 1
#network 192.168.2.0
#network 10.0.0.0
#network 20.0.0.0
#exit
```

Similarly click on the router 2, click on the CLI .Type the following commands

```
#en
#config t
# router eigrp 1
#network 192.168.3.0
#network 20.0.0.0
#exit
```

Step 7: To confirm Data transfer between the devices
Click on the node. Select desktop option and then command prompt. Once the window
pops up, ping the IP address of the device to which node0 is connected. Ping statistics
will be displayed. Also simulate in simulation and real mode.

Simulation Output:

Result: Thus the Enhanced Interior Gateway Routing Protocol (EIGRP) is simulated using
packet tracer simulation tool.

EXPERIMENT-12
SINGLE AREA OSPF LINK COSTS AND INTERFACES

Aim: To simulate single area Open Shortest Path First routing protocol using Cisco packet
. tracer simulation tool
Software used: Cisco Packet Tracer
Network components: PCs-2, Routers 2, Connectors

Procedure
Step 1: Select the generic hosts, switches and routers
Step 2: Connect the host, switches and routers using copper cross over and router to router
using serial DCE
Step 3: Identify the networks and label as 10.10.1.0, 10.10.2.0 and 10.10.3.0
Step 4: Configure the generic hosts PC0 with the IP address 10.10.1.1, gateway address

10.10.1.2 and host 2 with IP address 10.10.3.1and gate way address 10.10.3.2

Step 5: Configure the router 0 by clicking on the config. The router is connected to 2 networks. For each connection, separate IP addresses are assigned. For connections to network 1 and 2 the IP address for router 0 are 10.10.1.2 and 10.10.2.1 respectively.

Similarly for router 1, to connect to network 2 ad 3, the IP addresses are 10.10.2.2 and 10.10.3.2. Choose the subnet mask as 255.255.255.0.Select the fastethernet for connecting host and router and serial interface for connecting the routers click on the port status to turn on the router.

OSPF has some basic rules when it comes to area assignment. OSPF must be configured with areas. The backbone area 0, or 0.0.0.0, must be configured if more than one area assignment is done. If OSPF is configured in one area; any area can be chosen, although good OSPF design dictates to configure area 0.

Step 6: To configure OSPF click on the router 0,click on the CLI. Type the following commands

```
#router ospf 1
#network 10.10.1.0 0.0.0.255 area 0
#network 10.10.2.0 0.255.255.255 area 0
#exit
```

Similarly click on the router 1, click on the CLI .Type the following commands.

```
#router ospf 1
#network 10.10.3.0 0.0.0.255 area 0
#network 10.10.2.0 0.255.255.255 area 0
#exit
```

Step 7: To confirm Data transfer between the devices

Click on the node. Select desktop option and then command prompt. Once the window pops up, ping the IP address of the device to which node0 is connected. Ping statistics will be displayed. Also simulate in simulation and real mode.

Simulation Output:

Result: Thus the single area Open Shortest Path First Protocol is simulated using packet tracer
simulation tool.

EXPERIMENT-13

MULTI AREA OPEN SHORTEST PATH FIRST ROUTING PROTOCOL

Aim: To simulate Multi Area Open Shortest Path First routing protocol using Cisco packet
. tracer simulation tool

Software used: Cisco Packet Tracer

Network components: PCs-6, Routers 3, Connectors, switches (3)

Procedure

Step 1**:** Select the generic hosts, switches and routers

Step 2: Connect the host, switches and routers using copper cross over and router to router using serial DCE

Step 3: Identify the networks and label as 192.168.1.0, 192.168.2.0,192.168.3.0,10.0.0.0 and 20.0.0.0

Step 4: Configure the generic hosts with the following IP address and gateway address

Host	IP address	Gateway	Network
PC0	192.168.1.2	192.168.1.1	192.168.1.0
PC1	192.168.1.3	192.168.1.1	192.168.1.0
PC2	192.168.2.2	192.168.2.1	192.168.2.0
PC3	192.168.2.3	192.168.2.1	192.168.2.0
PC4	192.168.3.2	192.168.3.1	192.168.3.0
PC5	192.168.3.3	192.168.3.1	192.168.3.0

Step 5: Configure the router 0 by clicking on the config. The router0 is connected to 2 networks. For each connection, separate IP addresses are assigned. For connections to networks 1 and 2, the IP address for router 0 are 192.168.1.1 and 10.0.0.1 respectively. Similarly for router 1, to connect to network 1,2 ad 3, the IP addresses are 10.0.0.2 192.168.2.1 and 20.0.0.1 and for router 2 to connect to network 2 and 3 the IP address are 20.0.0.2 and 192.168.3.1.Choose the subnet mask as 255.255.255.0 and 255.0.0.0. based on the IP address. Select the fast Ethernet interface for connecting host and router and serial interface for connecting the routers click on the port status to turn on the router .OSPF has some basic rules when it comes to area assignment. OSPF must be configured with areas. The backbone area 0, or 0.0.0.0, must be configured if more

than one area assignment is done. The network 192.168.2.0 is considered as backbone
area. Other areas are defined as area10 and area 20

Step 6: To configure multi area OSPF click on the router 0,click on the CLI. Type the following commands

```
#en
#config t
# router ospf 1
#network 192.168.1.0 0.0.0.255 area 10
#network 10.0.0.0 0.255.255.255 area 10
#end
```

Similarly click on the router 1, click on the CLI .Type the following commands.

```
#en
#config t
# router ospf 1
#network 192.168.2.0 0.0.0.255 area 0
#network 10.0.0.0 0.255.255.255 area 10
#network 20.0.0.0 0.255.255.255 area 20
#end
```

Similarly click on the router 2, click on the CLI .Type the following commands.

```
#en
#config t
# router ospf 1
#network 192.168.3.0 0.0.0.255 area 20
#network 20.0.0.0 0.255.255.255 area 20
#end
```

Step 7: To confirm Data transfer between the devices

Click on the node. Select desktop option and then command prompt. Once the window pops up, ping the IP address of the device to which node0 is connected. Ping statistics will be displayed. Also simulate in simulation and real mode.

Simulation Output:

Result: Thus the Multi area Open Shortest Path First Protocol is simulated using packet tracer simulation tool.

EXPERIMENT-14

BORDER GATEWAY ROUTING PROTOCOL

Aim: To simulate Border Gateway Routing protocol using Cisco packet tracer simulation tool

Software used: Cisco Packet Tracer

Network components: PCs-2, Routers 2, Connectors

Procedure

Step 1: Select the generic hosts, switches and routers

Step 2: Connect the host, switches and routers using copper cross over and router to router using serial DCE

Step 3: Identify the networks and label as 192.168.1.0, 192.168.2.0 and 192.168.3.0

Step 4: Configure the generic hosts PC0 with the IP address 192.168.1.2, gateway address 192.168.1.1 and host 2 with IP address 192.168.3.2and gateway address 192.168.3.1

Step 5: Configure the router 0 by clicking on the config. The router is connected to 2 networks. For each connection, separate IP addresses are assigned. For connections to network 1 and 2 the IP address for router 0 are 192.168.1.1 and 192.168.2.1 respectively Similarly for router 1, to connect to network 2 ad 3, the IP addresses are 192.168.2.2 and 192.168.3.1.Choose the subnet mask as 255.255.255.0.Select the on fastethernet for connecting host and router and serial interface for connecting the routers. Click port status to turn on the router.

Border gate way Routing Protocol is an inter domain routing protocol .Hence the

autonomous systems are defined as AS100 and AS200

Step 6: To configure BGP click on the router 0,click on the CLI. Type the following commands

```
#en
#config t
# router bgp 100
#network 192.168.1.0
#network 192.168.2.0
#neighbor 192.168.2.2  remote -as 200
#neighbor 192.168.3.2  remote -as 200
#exit
```

Similarly click on the router 1, click on the CLI .Type the following commands.

```
#en
#config t
# router bgp 200
#network 192.168.2.0
#network 192.168.3.0
#neighbor 192.168.2.1  remote -as 100
#neighbor 192.168.1.2  remote -as 100
#exit
```

Step 7: To confirm Data transfer between the devices

Click on the node. Select desktop option and then command prompt. Once the window pops up, ping the IP address of the device to which node0 is connected. Ping statistics will be displayed. Also simulate in simulation and real mode.

Simulation Output:

Result: Thus the Border Gateway Routing protocol is simulated using packet tracer simulation tool.